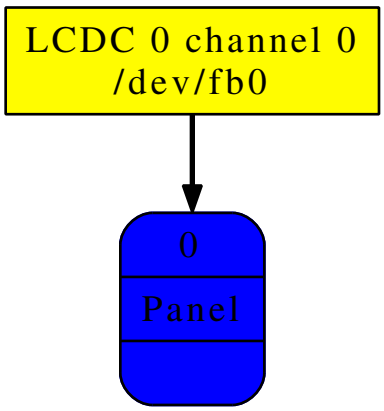
LCDC 0 channel 0
/dev/fb0
0
Panel